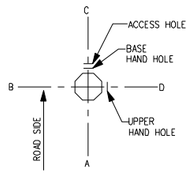

ORIENTATION

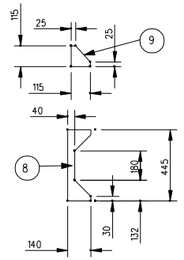

GUSSET PLATE
MK. 8 AND MK. 9

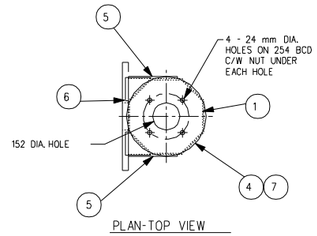

PLAN-TOP VIEW

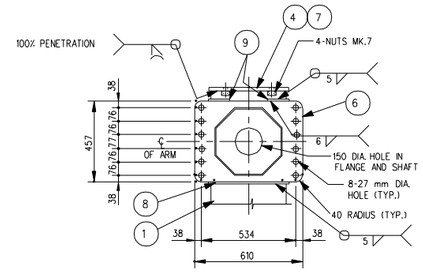

FRONT VIEW

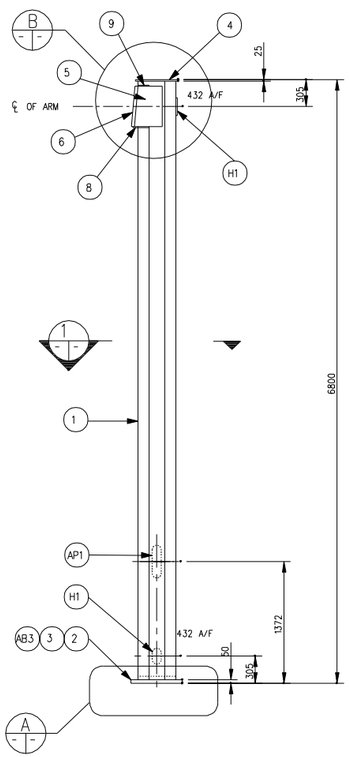

POLE ELEVATION
1:30
(STOCK CODE NO. 17927)

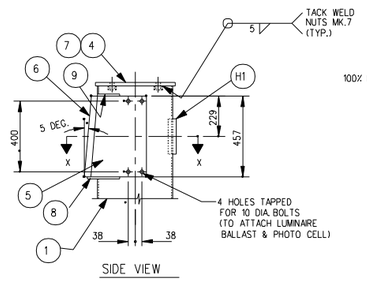

SIDE VIEW

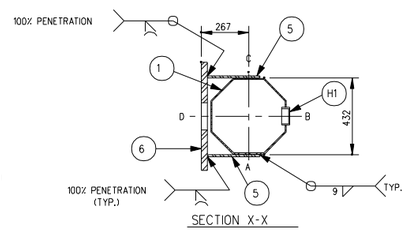

SECTION X-X

CONNECTION PLATE DETAIL
1:15
B

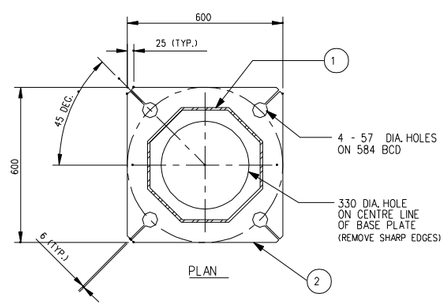

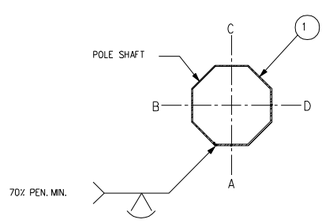

SECTION
N.T.S.
1

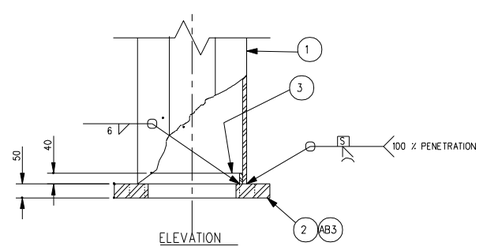

ELEVATION

BASE PLATE DETAIL
1:10
A

BILL OF MATERIALS

MK. NO.	QTY. REQ'D.	DESCRIPTION	SIZE	MATERIAL (G40.21-M-300W U/N)	REMARKS	LINE NO.
1	1	OCTAGONAL SECTION SHAFT	432 A/F x 9.525 x 6725			1
2	1	BASE PLATE	50 x 600 x 600			2
3	1	BACK-UP STRIP PLATE	6 x 40 x 1366			3
4	1	LUMINAIRE FLANGE PLATE	25 x 485 DIA.			4
5	2	SIDE PLATES	20 x 305 x 457			5
6	1	ARM FLANGE PLATE	40 x 457 x 610			6
7	4	HEAVY HEX NUTS	22 DIA.	ASTM A194 GRADE 2H	TAP AFTER GALVANIZED	7
8	1	BOTTOM GUSSET PLATE	10 x 140 x 445			8
9	2	TOP GUSSET PLATE	10 x 115 x 115			9
						10
AP1	1	ACCESS PANEL			SEE SHEET NO. S20	11
H1	2	HANDHOLE			SEE SHEET NO. S20	12
						13
						14
AB3	4	ANCHOR BOLT ASSEMBLY	51 DIA x 1750	AISI/SAE 4140	SUPPLIED BY OWNER SEE ANCHOR BOLT DWGS.	15
						16
						17
						18
						19
						20

NOTES:

1. ALL MATERIALS, EXCEPT STAINLESS STEEL AND ALUMINUM ITEMS, SHALL BE HOT DIP GALVANIZED IN ACCORDANCE WITH C.S.A. STANDARD G164 WITH NET RETENTION OF 600 g/m^2.
2. STAMP BASE AND FLANGE PLATES WITH 'STOCK CODE NUMBER'.
3. SHIP WITH HANDHOLE COVERS INSTALLED.
4. RELATED COMPONENTS AND DRAWINGS :
   - TYPE 6 ADVANCE WARNING SIGN EXTENSION ARM (E-016 R) - SHEET NO. S11
   - TYPE 7 TRAFFIC SIGNAL EXTENSION ARM (E-016 S) - SHEET NO.12
   - STRAIGHT STUB EXTENSION (E-016 D) - SHEET NO. S21
   - LUMINAIRE DAVIT ARM (E-016 E) - SHEET NO. S17
   - LUMINAIRE EXTENSION SHAFT (E-016 L) - SHEET NO. S18
   - HYDRO LUMINAIRE ADAPTOR (E-016 T) - SHEET NO. S19

REVISIONS

DATE	BY	DESCRIPTION

DILLON CONSULTING

CONSULTANT PROJECT NO.
98-5973-02

PROVINCE OF MANITOBA
S.S. RIHAL
REGISTERED PROFESSIONAL ENGINEER

TRAFFIC SIGNAL & ADVANCE WARNING SIGN STRUCTURES

TYPE 6 & TYPE 7-COMBINATION CANTILEVER

6.8m VERTICAL SHAFT
(FOR CANTILEVER STRUCTURES)

Manitoba Highways and Transportation
Traffic Engineering Branch

ACCEPTED BY:
TRAFFIC OPERATIONS ENGINEER — DATE

APPROVED BY:
DIRECTOR OF TRAFFIC ENGINEERING — DATE

PROJECT ENGINEER

DESIGN	BY:	S.S.R.
	CHECKED:	S.S.R.
DETAILS	BY:	N.B.G.
	TRACED:	N.B.G.
	CHECKED:	S.S.R.

SCALE: AS SHOWN
COMPONENT NO. E-016_W
SHEET No. S10

ACAD FILE: *CAD*985973*MANHWY*AUTOCAD*STRUCTURE_DWG*S10_16W.DWG 02/22/00